High-Density MPO Patch Panel Series

SP-HDF Series | 1U to 4U | 144 to 576 fibers | 19-inch rack mount

The SP-HDF series organizes MPO backbone connections in indoor racks. Choose sliding trays for front access to individual tray levels, or the 3U fixed panel for centralized distribution through twelve 24-fiber modules.

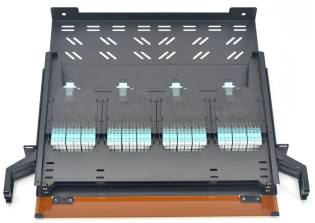

1U / 144F

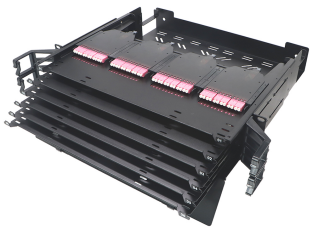

2U / 288F



3U / 288F



4U / 576F

MODEL SELECTION & ORDERING

Model	Rack	Max. fibers	Enclosure access	Module layout	W x D x H
SP-HDF-1U	1U	144F	3 sliding trays	12 x 12F	483 x 425 x 44 mm
SP-HDF-2U	2U	288F	6 sliding trays	24 x 12F	483 x 425 x 88 mm
SP-HDF-3U	3U	288F	Fixed, non-sliding	12 x 24F	483 x 425 x 132 mm*
SP-HDF-4U	4U	576F	12 sliding trays	48 x 12F	483 x 425 x 173 mm

* The 3U dimensions are listed as 483 x 425 x 132 mm in the source, which marks them with an asterisk and gives no tolerance.

COMMON SPECIFICATIONS

Parameter	Specification
Mounting / environment	Standard 19-inch rack / indoor installation
Enclosure color	Black
Customization	Available
Transport packaging / origin	Carton / China
Listed compliance	CE, ISO and RoHS, as listed in the individual product information

APPLICATIONS

Data center backbone distribution, centralized optical cross-connects, enterprise structured cabling and telecommunications equipment rooms.

RACK PLANNING & ORDERING DETAILS

Allow front clearance for door operation, tray extension where applicable, and patch-cord routing. Specify the model, number of modules, fiber type, connector configuration and MPO polarity when ordering.

SP-HDF-1U | 1U 144F SLIDING

Three numbered trays with four 12F cassettes per tray.

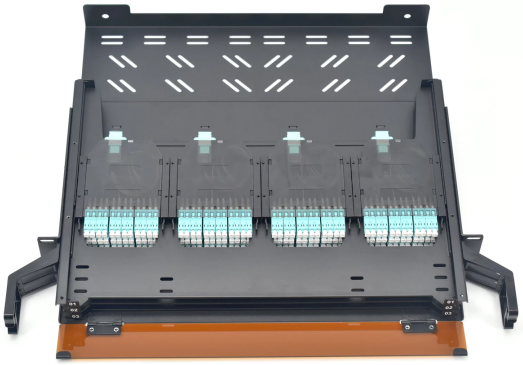

Sliding tray extended



Door closed

Parameter	Specification
Capacity / module configuration	144F / 12 x 12F
Dimensions (W x D x H)	483 x 425 x 44 mm
Cassette and interface	MPO-to-LC
Housing and finish	Aluminum alloy with black electrostatic powder coating
Cable management / door	Integrated front cable management tray / latching door

SP-HDF-2U | 2U 288F SLIDING

Six numbered trays with four 12F cassettes per tray.

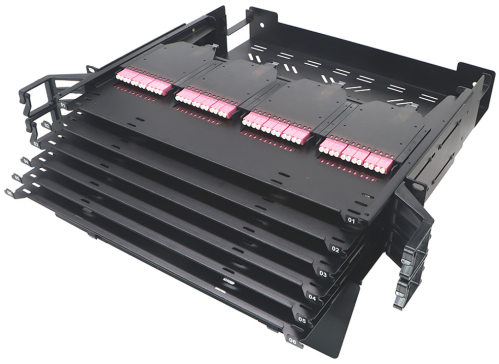

Top tray extended



Six tray levels

Parameter	Specification
Capacity / module configuration	288F / 24 x 12F
Dimensions (W x D x H)	483 x 425 x 88 mm
Cassette and interface	MPO-to-LC
Housing and finish	Aluminum alloy with black electrostatic powder coating
Cable management / door	Integrated front cable management tray / latching door

SP-HDF-3U | 3U 288F FIXED

Twelve 24F modules in a single fixed 3U enclosure.



Front module access



Angled enclosure view

Parameter	Specification
Capacity / module configuration	288F / 12 x 24F
Dimensions (W x D x H)	483 x 425 x 132 mm*
Module type	Fixed modular distribution cassettes
Backbone interface	MPO
Fiber density	96 fibers per rack unit

SP-HDF-4U | 4U 576F SLIDING

Twelve numbered trays with four 12F module positions per tray.



Front tray levels



Angled enclosure view

Parameter	Specification
Capacity / module configuration	576F / 48 x 12F
Dimensions (W x D x H)	483 x 425 x 173 mm
Tray identification	01 to 12
Optical connectivity	Modular MPO
Cable management / door	Dual-side cable guides / hinged protective front door

SP-HDF-1U | Mechanical Drawing

1U 144F Sliding MPO Patch Panel | Dimensions in mm

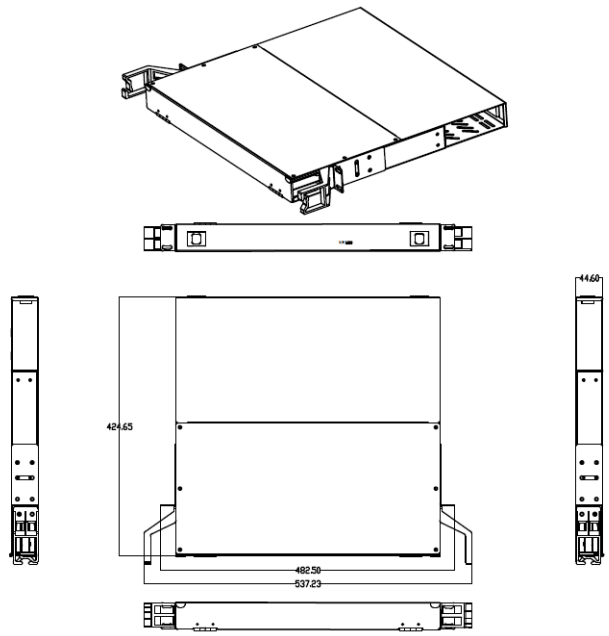

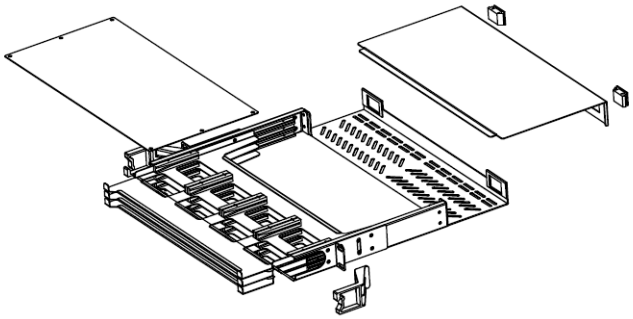

REFERENCE DIMENSIONS FROM DRAWING

482.50 mm width | 424.65 mm depth | 44.60 mm height

The model tables list nominal dimensions. Refer to the dimension arrows in this drawing for measurement points and installation clearances.

SP-HDF-2U | Mechanical Drawing

2U 288F Sliding MPO Patch Panel | Dimensions in mm

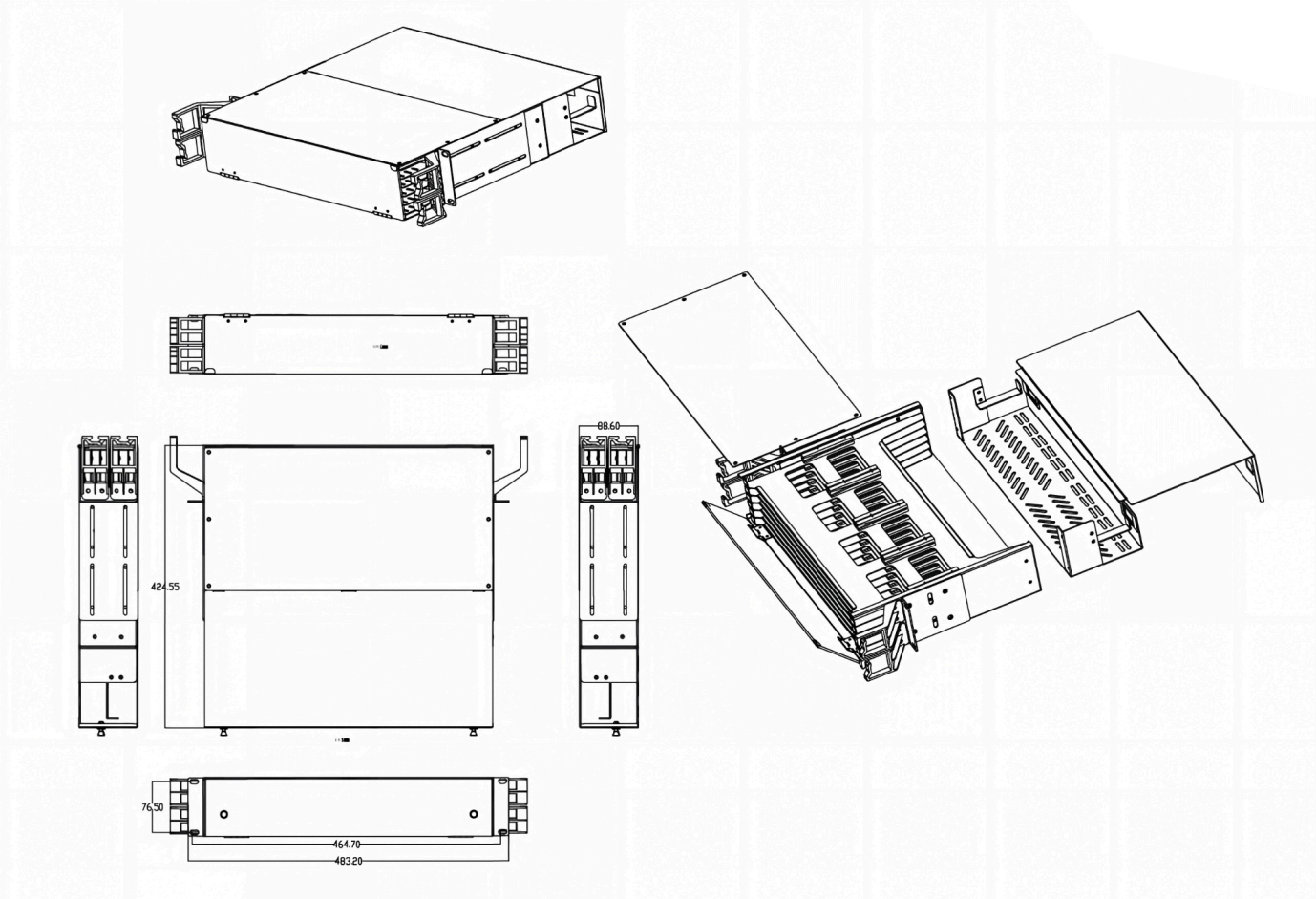

REFERENCE DIMENSIONS FROM DRAWING

483.20 mm width | 424.55 mm depth | 88.60 mm height

The model tables list nominal dimensions. Refer to the dimension arrows in this drawing for measurement points and installation clearances.

SP-HDF-4U | Mechanical Drawing

4U 576F Sliding MPO Patch Panel | Dimensions in mm

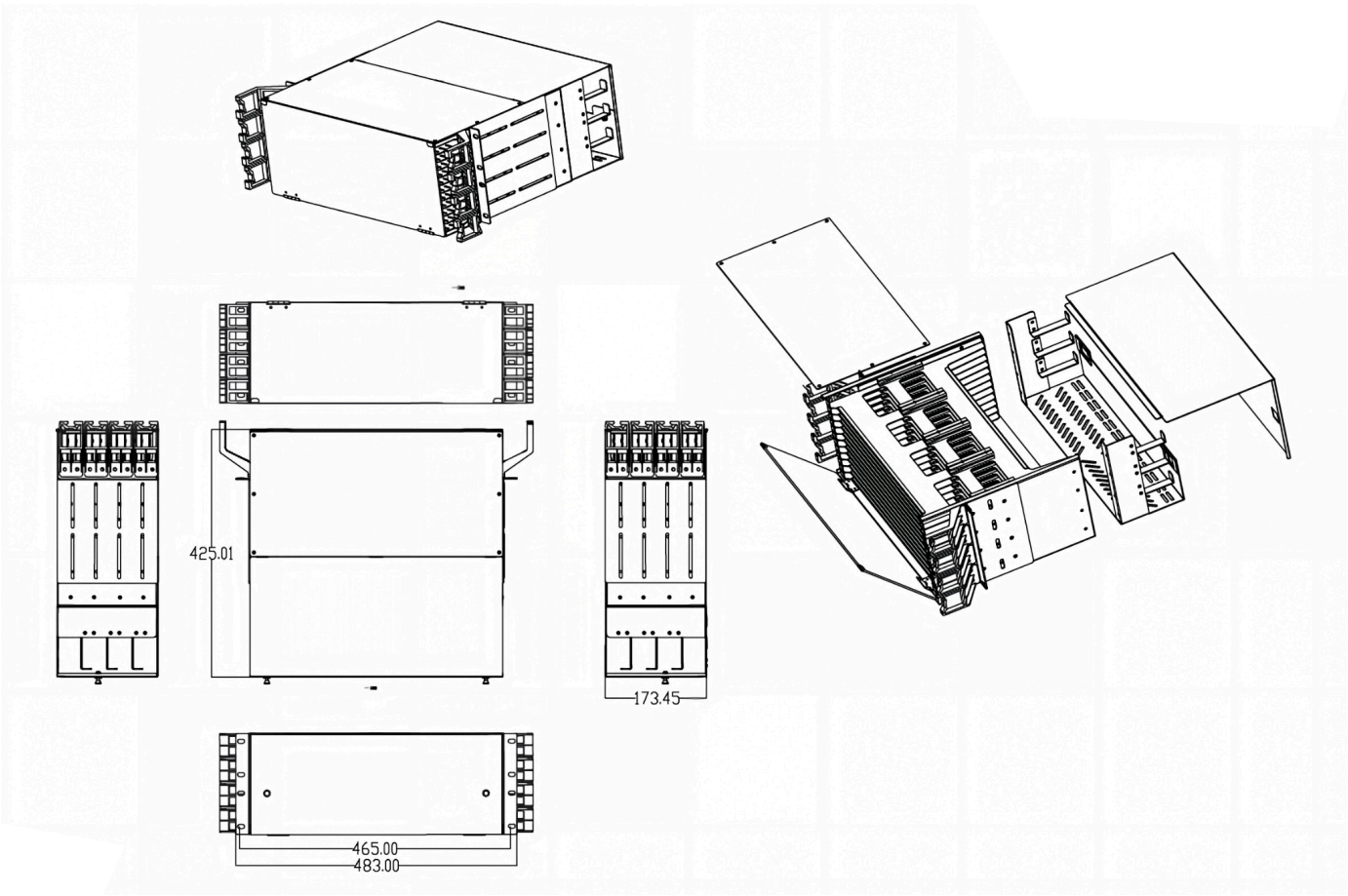

REFERENCE DIMENSIONS FROM DRAWING

483.00 mm width | 425.01 mm depth | 173.45 mm height

The model tables list nominal dimensions. Refer to the dimension arrows in this drawing for measurement points and installation clearances.