40G QSFP+ SR4 850 nm Optical Transceiver

4 x 10.3125 Gbps | MPO | 100 m on OM3 / 150 m on OM4 | DDM

DQS4-8M40-SIY8 | Technical source revision V0.1

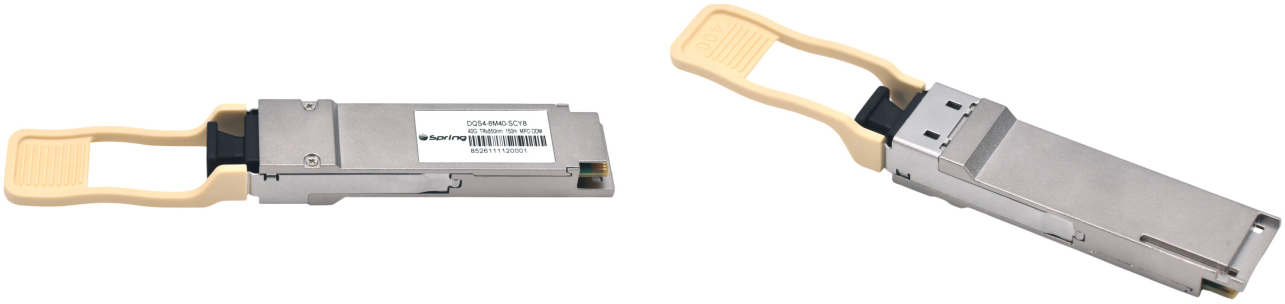

PRODUCT FEATURES

- QSFP+ MSA compliant
- 10.3125 Gbps signaling rate per lane
- Up to 100 m on OM3 and 150 m on OM4
- Single nominal +3.3 V supply
- 850 nm VCSEL transmitter with four lanes
- MPO interface for parallel multimode fiber
- Digital diagnostic monitoring (DDM)
- 1.5 W maximum power consumption

APPLICATIONS & COMPLIANCE

Data center backbone. The electrical interface complies with the 40GbE XLPPI specification in IEEE 802.3ba-2010. The optical interface complies with the IEEE 802.3ae 10GBASE-SR optical specification, as stated in the source.

ORDERING INFORMATION

Source ordering model	Form factor	Wavelength	Interface	OM4 reach	Case temperature
DQS4-8M40-SIY8	QSFP+	850 nm	MPO	150 m	-40 to +85 °C

The product photo shows Spring Optical label DQS4-8M40-SCY8. The ordering model and technical limits on this datasheet follow the source model DQS4-8M40-SIY8 (V0.1). The source also lists a commercial case temperature of 0 to +70 °C without a commercial ordering code.

ABSOLUTE MAXIMUM RATINGS

Parameter	Symbol	Min.	Max.	Unit
Storage temperature	TS	-40	85	°C
Relative humidity	HA	0	85	%

Original ratings notes mention wave soldering and iron soldering. The source does not associate either note with a listed rating.

RECOMMENDED OPERATING CONDITIONS

Parameter	Symbol	Min.	Typ.	Max.	Unit	Notes
Case temperature	TC	-40	—	85	°C	
Power supply voltage	VCC	3.135	3.3	3.465	V	
Signaling rate per channel	—	—	10.3125	—	Gbps	
Supply noise rejection	—	—	—	100	mV	
Receiver differential data output impedance	—	—	100	—	Ω	
Operating distance	D	—	—	100	m	OM3

ELECTRICAL CHARACTERISTICS

Test temperature 25 °C unless otherwise stated.

Parameter	Symbol	Min.	Typ.	Max.	Unit	Notes
Power consumption	—	—	—	1.5	W	
Supply current	Icc	—	—	450	mA	

TRANSMITTER CHARACTERISTICS

Parameter	Symbol	Min.	Typ.	Max.	Unit	Notes
Signaling rate per lane	GBb	—	10.3125	—	GBd	
Center wavelength	λ	840	850	860	nm	
RMS spectral width	SW	—	—	0.6	nm	
Average launch power per lane	Pf	-8.4	—	2.4	dBm	
Optical modulation amplitude per lane	TxOMA	-6.4	—	3	dBm	
Average launch power per lane, TX off	—	—	—	-30	dBm	
Extinction ratio	ER	3	—	—	dB	

RECEIVER CHARACTERISTICS

Parameter	Symbol	Min.	Typ.	Max.	Unit	Notes
Signaling rate per lane	GBb	—	10.3125	—	GBd	
Center wavelength	λ	840	—	860	nm	
Damage threshold	—	3.4	—	—	dBm	
Average receiver input power per lane	—	-10.3	—	2.4	dBm	
Receive power per lane (OMA)	—	—	—	3	dBm	
Receiver sensitivity (OMA)	SOMA	—	—	-11.1	dBm	10^{-12} BER
Receiver reflectance	—	—	—	-12	dB	
LOS assert	LOSA	-30	—	—	dBm	
LOS deassert	LOSD	—	—	-11	dBm	
LOS hysteresis	—	0.5	—	—	dB	

DIGITAL DIAGNOSTIC MONITOR ACCURACY

Parameter	Accuracy	Unit
Module temperature	±3	°C
Module supply voltage	±3	%
Tx bias current	±10	%
Tx output power	±3	dB
Rx average optical power	±3	dB

PIN CONFIGURATION & DEFINITIONS

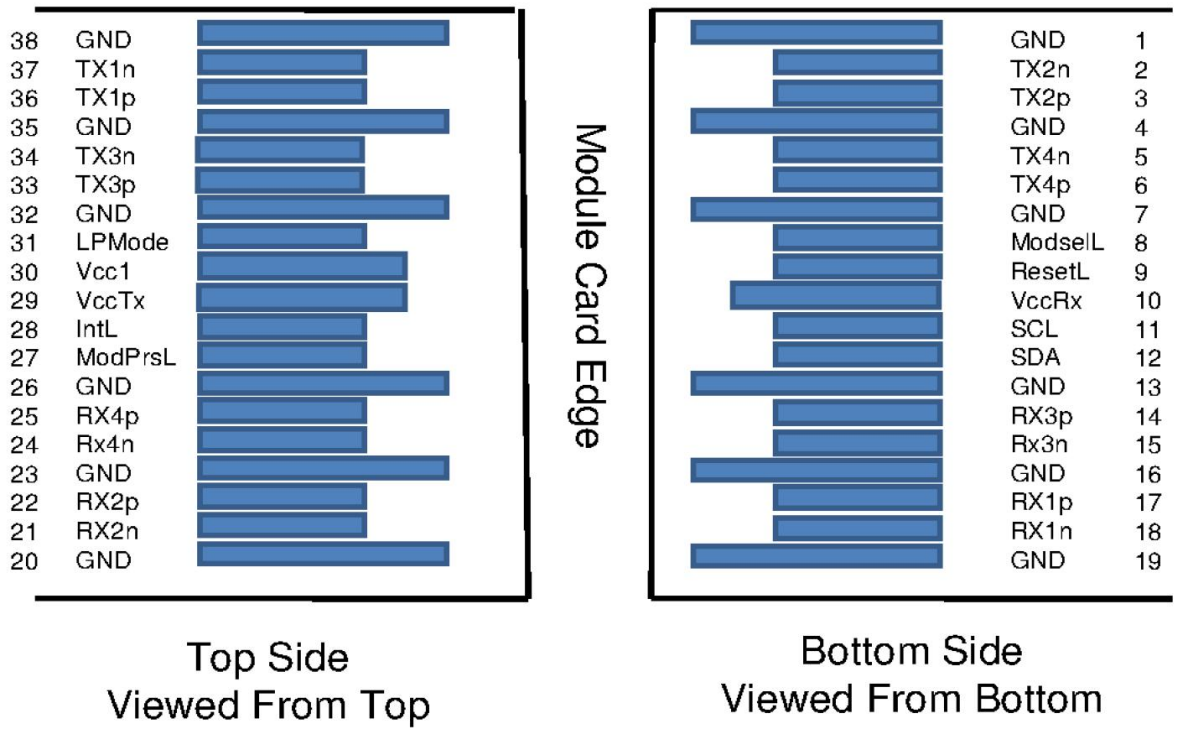

38-pin QSFP+ connector pinout. Orientation is shown in the source diagram.

PIN ASSIGNMENT | PINS 1–19

Pin	Logic	Symbol	Description
1		GND	Ground
2	CML-I	Tx2n	Transmitter inverted data input
3	CML-I	Tx2p	Transmitter non-inverted data input
4		GND	Ground
5	CML-I	Tx4n	Transmitter inverted data input
6	CML-I	Tx4p	Transmitter non-inverted data input
7		GND	Ground
8	LVTTL-I	ModSelL	Module select
9	LVTTL-I	ResetL	Module reset
10		VccRx	+3.3 V receiver supply
11	LVCMOS-I/O	SCL	2-wire serial interface clock
12	LVCMOS-I/O	SDA	2-wire serial interface data
13		GND	Ground
14	CML-O	Rx3p	Receiver non-inverted data output
15	CML-O	Rx3n	Receiver inverted data output
16		GND	Ground
17	CML-O	Rx1p	Receiver non-inverted data output
18	CML-O	Rx1n	Receiver inverted data output
19		GND	Ground

PIN ASSIGNMENT | PINS 20–38

Pin	Logic	Symbol	Description
20		GND	Ground
21	CML-O	Rx2n	Receiver inverted data output
22	CML-O	Rx2p	Receiver non-inverted data output
23		GND	Ground
24	CML-O	Rx4n	Receiver inverted data output
25	CML-O	Rx4p	Receiver non-inverted data output
26		GND	Ground
27	LVTTL-O	ModPrsL	Module present
28	LVTTL-O	IntL	Interrupt
29		VccTx	+3.3 V transmitter supply
30		Vcc1	+3.3 V supply
31	LVTTL-I	LPMode	Low power mode
32		GND	Ground
33	CML-I	Tx3p	Transmitter non-inverted data input
34	CML-I	Tx3n	Transmitter inverted data input
35		GND	Ground
36	CML-I	Tx1p	Transmitter non-inverted data input
37	CML-I	Tx1n	Transmitter inverted data input
38		GND	Ground

Tx pins 3, 6, 34 and 37 are described as inputs in this table, consistent with their CML-I logic designation in the source.

MECHANICAL SPECIFICATIONS

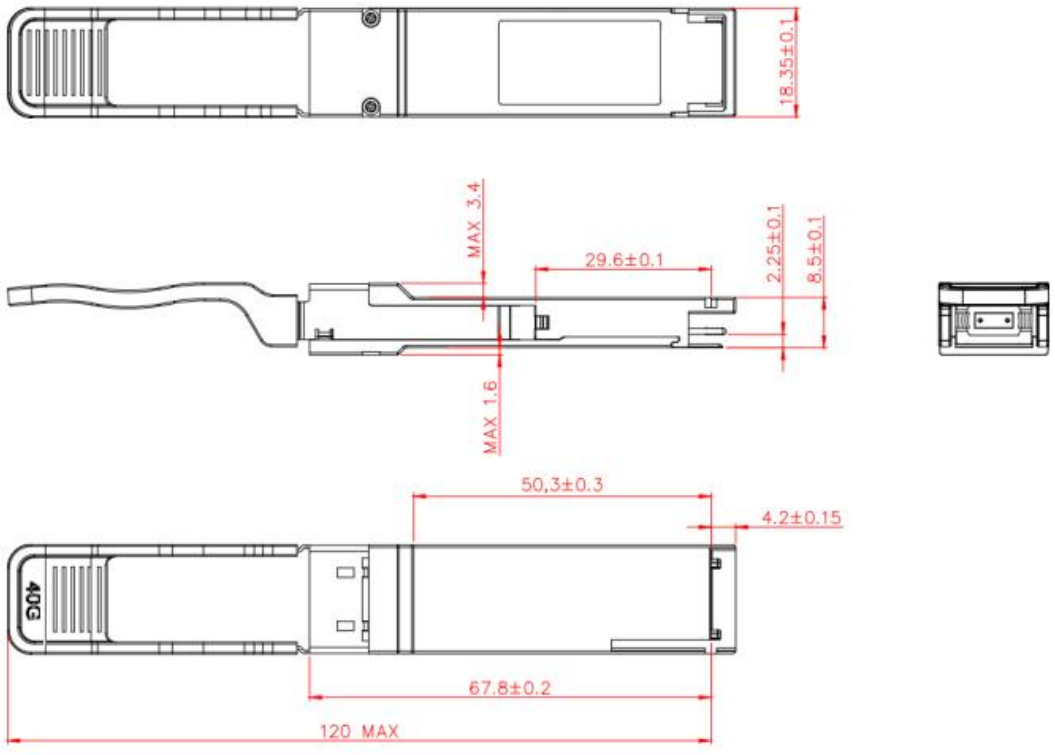

Module outline and mechanical dimensions from the source drawing. Dimensions are in millimeters.