100G QSFP28 SR4 850 nm Optical Transceiver

103.1 Gbps aggregate | MPO-12 | 70 m OM3 / 100 m OM4 | DDM

DQS1-8MA0-SCYM | Technical source Rev. A0

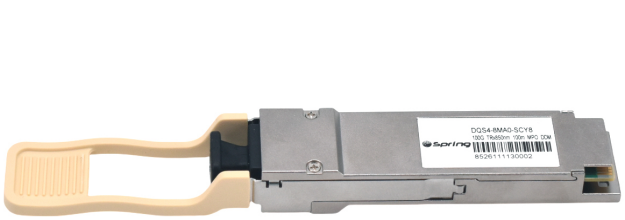

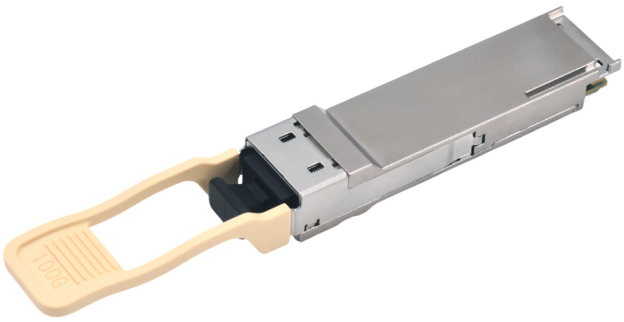

PRODUCT FEATURES

- 103.1 Gbps aggregate, 4 x 25 Gbps electrical interface
- Up to 70 m on OM3 or 100 m on OM4 MMF with host FEC
- Single nominal +3.3 V supply and low power consumption
- Hot-pluggable QSFP28 with a single MPO-12 receptacle
- Digital diagnostic monitoring (DDM)
- RoHS-6 compliant and lead-free

APPLICATIONS & COMPLIANCE

100GBASE-SR4 100 Gigabit Ethernet | QSFP28 MSA | IEEE 802.3bm | SFF-8636 | RoHS

ORDERING INFORMATION

Source part number	Lane rate	Laser	Reach	Fiber	DDMI	Interface	Case temp.
DQS1-8MA0-SCYM	25.78125 Gbps	850 nm	100 m	OM4 MMF	Yes	MPO-12	0 to +70 °C

The product photo shows Spring Optical label DQS4-8MA0-SCY8. The ordering information and technical limits below follow source model DQS1-8MA0-SCYM (Rev. A0).

GENERAL PRODUCT CHARACTERISTICS

Parameter	Symbol	Min.	Typ.	Max.	Unit	Ref.
Aggregate bit rate	BR	—	—	103.1	Gbps	1
Pre-FEC bit error ratio	BER	—	—	10^{-5}	—	2
OM3 multimode fiber reach	d	—	—	70	m	3
OM4 multimode fiber reach	d	—	—	100	m	3

1. Supports 100GBASE-SR4 per IEEE 802.3bm. 2. Tested with a PRBS $2^{31} - 1$ pattern. 3. Host FEC is required to achieve the stated maximum reach.

ABSOLUTE MAXIMUM RATINGS

Parameter	Symbol	Min.	Typ.	Max.	Unit	Ref.
Storage temperature	TS	-40	—	85	°C	
Storage ambient humidity	HA	0	—	85	%	
Maximum supply voltage	VCC	-0.5	—	3.6	V	
Receiver damage threshold	—	+3.4	—	—	dBm	
Lead soldering temperature / duration	TSOLD	—	—	260 / 10	°C / s	1
Lead soldering temperature / duration	TSOLD	—	—	360 / 10	°C / s	2

1. Wave soldering. 2. Soldering iron only.

OPTICAL CHARACTERISTICS | TRANSMITTER PER LANE

Parameter	Symbol	Min.	Typ.	Max.	Unit	Ref.
Average output power	POUT	-6	—	2.4	dBm	
Extinction ratio	ER	2	—	—	dB	
Center wavelength	λC	840	—	860	nm	
RMS spectral width	σ	—	—	0.6	nm	
Transmitter OFF output power	POff	—	—	-30	dBm	

Transmitter eye mask {X1, X2, X3, Y1, Y2, Y3} = {0.3, 0.38, 0.45, 0.35, 0.41, 0.5}. Hit ratio: 1.5×10^{-3} hit/sample.

OPTICAL CHARACTERISTICS | RECEIVER PER LANE

Parameter	Symbol	Min.	Typ.	Max.	Unit	Ref.
Input optical wavelength	λIN	840	—	860	nm	
Receiver sensitivity (OMA) at BER = 5×10^{-5}	RSENS	—	—	-10.3	dBm	1
Input saturation power (overload)	PSAT	+2.4	—	—	dBm	
Receiver reflectance	Rfl	—	—	-12	dB	
Loss of signal assert	PA	-30	—	—	dBm	
Loss of signal deassert	PD	—	—	-12	dBm	
LOS hysteresis	PD - PA	0.5	—	—	dB	

1. The source footnote gives a PRBS $2^{31} - 1$ pattern and states “225.78125Gbps.BER=E-12.” The sensitivity row above retains the BER printed in the source table.

ELECTRICAL INTERFACE CHARACTERISTICS

Parameter	Symbol	Min.	Typ.	Max.	Unit	Ref.
Supply voltage	VCC1 / VCCTX / VCCRX	3.15	—	3.45	V	
Supply current	ICC	—	—	750	mA	
Tx differential input impedance	Rin	90	100	110	Ω	
Tx single-ended input voltage tolerance	VinT	-0.3	—	4.0	V	
Tx single-ended data input swing	Vin,pp	200	—	1000	mV	
Rx differential output impedance	Rout	90	100	110	Ω	
Rx single-ended data output swing	Vout,pp	200	—	1000	mV	
Rx single-ended output voltage	VoutR	-0.3	—	4.0	V	

PIN CONFIGURATION & DEFINITIONS

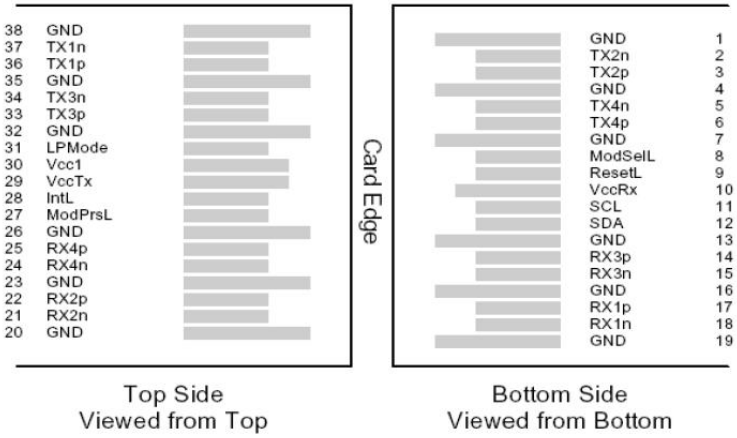

Pin	Symbol	Description	Ref.
1	GND	Ground	1
2	Tx2n	Transmitter inverted data input	
3	Tx2p	Transmitter non-inverted data input	
4	GND	Ground	1
5	Tx4n	Transmitter inverted data input	
6	Tx4p	Transmitter non-inverted data input	
7	GND	Ground	1
8	ModSe1L	Module select	
9	ResetL	Module reset	
10	VccRx	+3.3 V receiver supply	
11	SCL	2-wire serial interface clock	
12	SDA	2-wire serial interface data	
13	GND	Ground	1
14	Rx3p	Receiver non-inverted data output	
15	Rx3n	Receiver inverted data output	
16	GND	Ground	1
17	Rx1p	Receiver non-inverted data output	
18	Rx1n	Receiver inverted data output	
19	GND	Ground	1
20	GND	Ground	1
21	Rx2n	Receiver inverted data output	
22	Rx2p	Receiver non-inverted data output	
23	GND	Ground	1
24	Rx4n	Receiver inverted data output	
25	Rx4p	Receiver non-inverted data output	
26	GND	Ground	1
27	ModPrSL	Module present	
28	IntL	Interrupt	
29	VccTx	+3.3 V transmitter supply	
30	Vcc1	+3.3 V power supply	
31	LPMode	Low power mode	
32	GND	Ground	1
33	Tx3p	Transmitter non-inverted data input	
34	Tx3n	Transmitter inverted data input	
35	GND	Ground	1
36	Tx1p	Transmitter non-inverted data input	
37	Tx1n	Transmitter inverted data input	
38	GND	Ground	1

1. Circuit ground is internally isolated from chassis ground.

DIGITAL DIAGNOSTIC FUNCTIONS

2-Wire Serial Address 1010000x	
Lower Page 00h	
0	Identifier
1- 2	Status
3- 21	Interrupt Flags
22- 33	Free Side Device Monitors
34- 81	Channel Monitors
82- 85	Reserved
86- 98	Control
99	Reserved
100-104	Hardware Interrupt Pin Masks
105-106	Vendor Specific
107	Reserved
108-110	Free Side Device Properties
111-112	Assigned for use by PCI Express
113	Free Side Device Properties
114-118	Reserved
119-122	Password Change Entry Area (Optional)
123-126	Password Entry Area (Optional)
127	Page Select Byte

Upper Page 00h	Optional Page 01h	Optional Page 02h	Optional Page 03h
128 Identifier	128 CC_APPS	128-255 User EEPROM Data	128-175 Free Side Device Thresholds
129-191 Base ID Fields	129 AST Table Length (TL)		
	130-131 Application Code Entry 0		
	132-133 Application Code Entry 1		
	134-253 other entries		
			176-223 Channel Thresholds
192-223 Extended ID			224 Tx EQ & Rx Emphasis Magnitude ID
224-255 Vendor Specific ID			225 RX output amplitude indicators
			226-241 Channel Controls
			242-251 Channel Monitor Masks
	254-255 Application Code Entry TL		252-255 Reserved

2-wire serial memory map showing the lower page and upper page assignments, including the optional pages listed in the source.

RECOMMENDED INTERFACE CIRCUIT

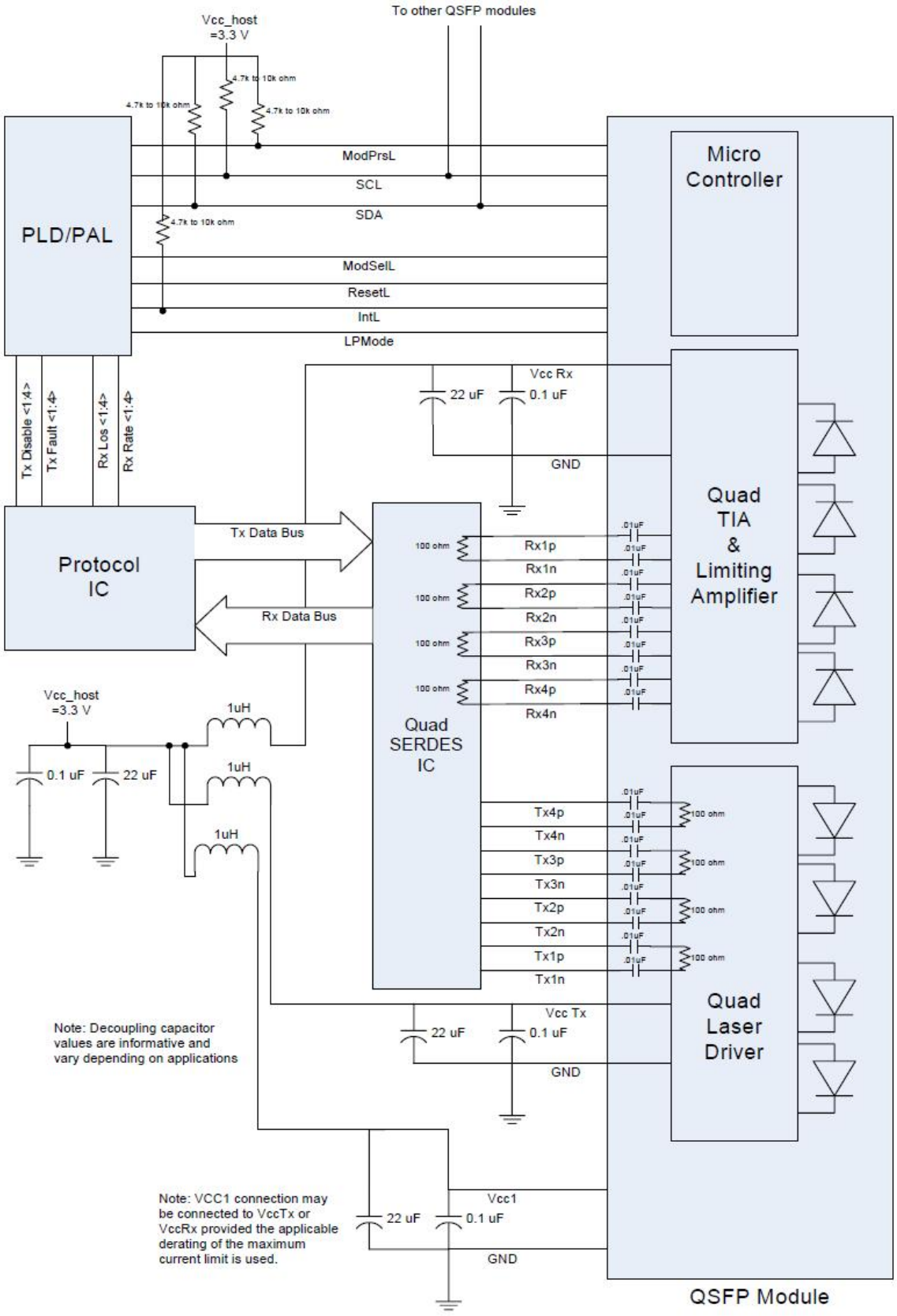

Recommended host-to-module interface circuit from the source document.

MECHANICAL SPECIFICATIONS

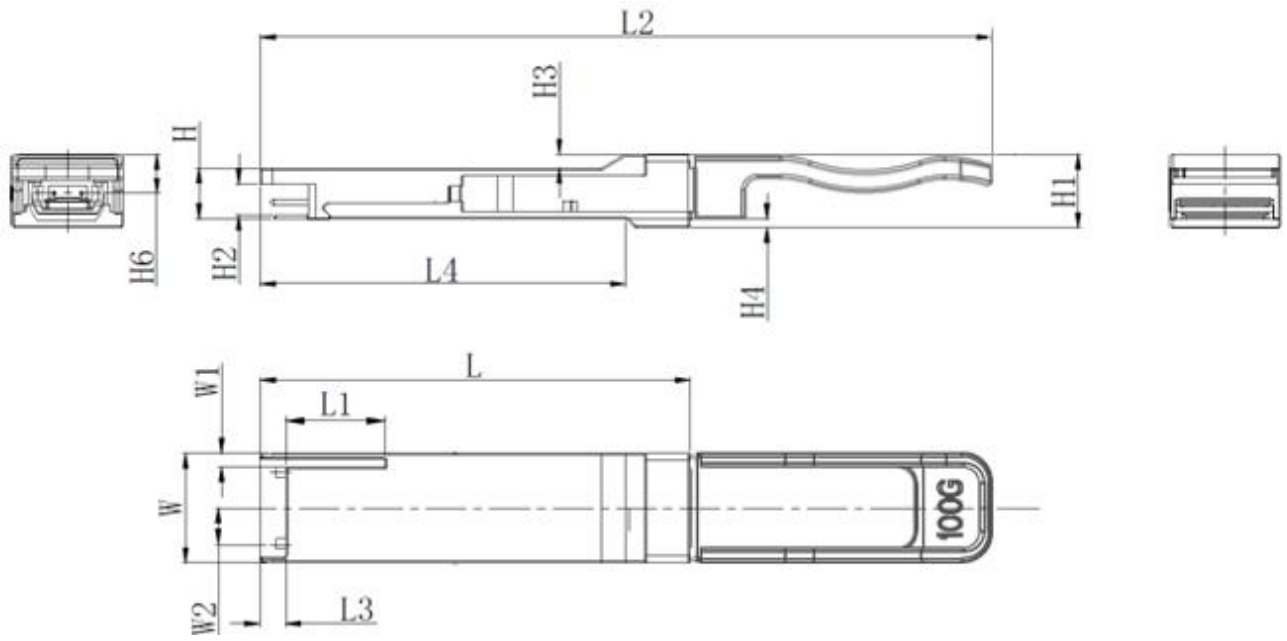

Unit mm

	L	L1	L2	L3	L4	W	W1	W2	H	H1	H2	H3	H4	H5	H6
Max	72.2	-	-	4.35	61.4	18.45	-	6.2	8.6	12.4	5.35	2.5	1.6	2	-
TYPE	72	-	121	4.2	61.2	18.35	-	-	8.5	12.2	5.2	2.3	1.5	1.8	6.55
Min	68.8	16.5	-	4.05	61	18.25	2.2	5.8	8.4	12	5.05	2.1	1.3	1.6	-

Module outline and dimensional limits. All dimensions are in millimeters.

DOCUMENT REVISION

Revision	Initiated	Reviewed	Change	Release date
A0	LEE	RAY	Initial release	2023-07-31